HOSPITALITY DIGISIGN

Direct LED
Commercial Widescreen Integrated HDTV

- **55LN541C**
  55" class (54.6" measured diagonally)
- **47LN541C**
  47" class (46.9" measured diagonally)
- **42LN541C**
  42" class (41.9" measured diagonally)
- **32LN541C**
  32" class (31.5" measured diagonally)

Optimized Features for Commercial Use

FOR EFFICIENT MANAGEMENT

PUBLIC DISPLAY MODE
From channel selection to energy-saving features, Public Display Mode allows you to control the TV settings in your business area prevent misuse by customers, set volume limits, or restore factory defaults on any TV. You are in control of it all.

USB CLONING
The USB Cloning feature allows you to simply copy the TV settings onto all TVs using a USB stick, a process that is fully automated to save time without having to set each TV one by one.

WELCOME SCREEN
Welcome visitors with a warm greeting message that includes your business name and logo.

MULTI IR
Multi IR function eliminates the remote control signal interference between TVs in multiple dwelling rooms. This system will work using the same LG TV model.
(Optional 124-213-10 required)

RS232C CONTROL
Via the TV's RS-232C port, you can remotely control multiple TVs' power and volume settings simultaneously.

FOR CONVENIENCE & ENTERTAINMENT

EXTERNAL SPEAKER OUT
Enhance the entertainment experience by adding an additional speaker, visitors to listen to and control the TV audio from anywhere in your business area, including restrooms.

IR OUT
IR Out enables customized set-top boxes to receive IR signals via LG TV Signage. This added convenience requires only simple connections and allows easy management using a single remote control.

REMOTE JACK PACK
The plug and play function with compatible Remote Jack Pack enables guests to view media from their portable devices on the TV screen seemlessly.

USB 2.0
You can play images and videos from and record TV programs to external storage devices. Immediate recording and reserved recording options are available.

LG
Life's Good
LGsolutions.com

Direct LED
Commercial Widescreen Integrated HDTV

55LN541C
55" class (54.6" measured diagonally)

47LN541C
47" class (46.9" measured diagonally)

42LN541C
42" class (41.9" measured diagonally)

32LN541C
32" class (31.5" measured diagonally)

HOSPITALITY DIGISIGN

55LN541C/47LN541C

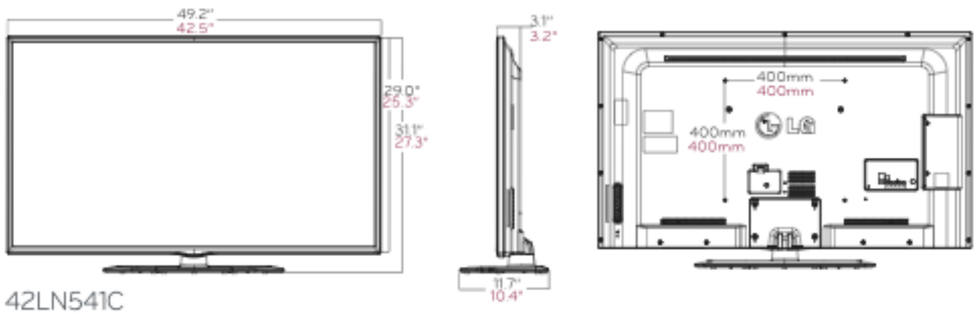

42LN541C

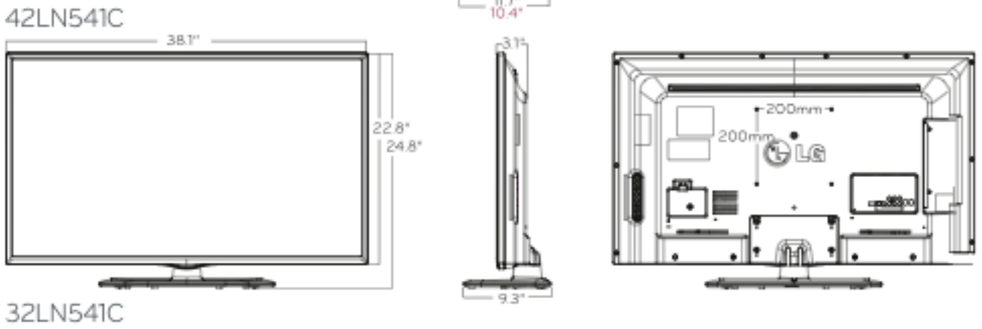

32LN541C

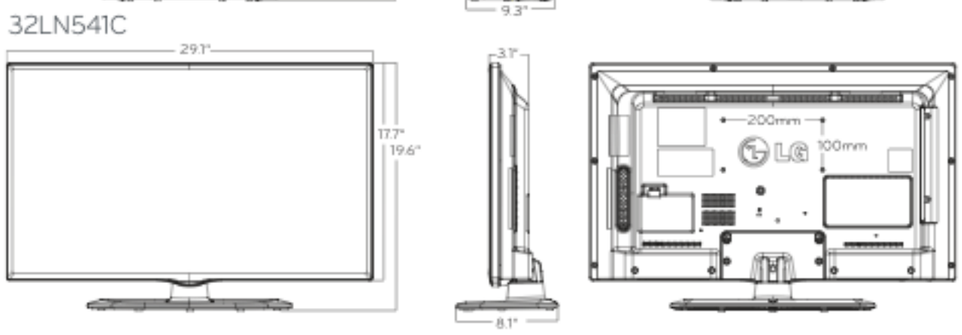

Rear Jack Panel

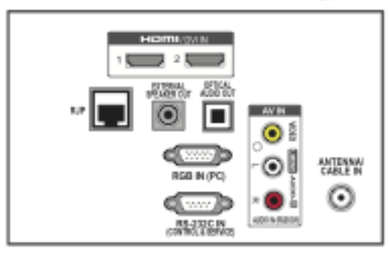

Side Jack Panel

	Model	55LN541C	47LN541C	42LN541C	32LN541C
PANEL	Backlighting	Direct LED			
	LCD Panel Type	55" Class (54.6" measured diagonally)	47" Class (46.9" measured diagonally)	42" Class (41.9" measured diagonally)	32" Class (31.5" measured diagonally)
	Native Resolution	1920 x 1080 (FHD)			1366 x 768 (HD)
	Brightness	300cd/m²			
	Dynamic CR	1,000,000:1			
	Viewing Angle (HxV)	178°/178°			
	Response Time	9ms			
	Frame Rate	60Hz			
VIDEO	Built-In Tuner	ATSC/NTSC/Clear QAM			
	XD Engine	Yes			
	24p Real Cinema (24p 5:5/2:2 Pulldown)	Yes			
	Eye Care (Anti Dazzling)	Yes			
AUDIO	Audio Output	20W (10W x 2)			
	Speaker System	1 Way 2 Speakers			
	Infinite Sound	Yes			
	Invisible Speaker	Yes			
	Clear Voice II	Yes			
SPECIAL FEATURES	RF(1/2Tuner)	Yes (1 Tuner)			
	Simplink	Yes (HDMI-CEC)			
	SI Compatible (TVLink Protocol)	Yes (TV Link Tuner)			

	Model	55LN541C	47LN541C	42LN541C	32LN541C
SPECIAL FEATURES (CONT.)	Hotel Mode/ PDM /Installer Menu	Yes			
	RJP Compatibility	LG,Teleadapt (RJ45, HDMI CEC), G-Link(HDMI-CEC)			
	USB	USB2.0, USB Auto Play back, USB Cloning			
	Moving Picture Playback (SD/HD/Plus HD)	Divx HD			
	Picture	JPEG			
	Audio Codec	AC3(Dolby Digital), EAC3, AAC, Mpeg, MP3, PCM			
	USB Cloning	USB 2.0			
	Multi IR Code	Yes			
	Welcome Screen (Splash Image)	Yes			
	Auto Off / Auto Sleep	Yes			
	Video Mute	Yes			
	Smart Energy Saving	Yes			
	Anti-theft System	Kensington Lock			
INPUTS/ OUTPUTS	USB (2.0)	1 Side			
	RF In	1 Rear			
	AV In	1 Rear			
	Digital Audio Out (Coaxial / Optical)	1 Rear (Optional)			
	HDMI/HDCP Input	3 (2 Rear, 1 Side)			
	RGB In (D-sub 15pin) - PC	1 Rear			
	PC Audio Input	1 (Sharing with AV In)			
	RS-232C (D-Sub 9pin)	1 Rear			
	RJ45 (RJP interface)	1 Rear			
	External Speaker Out (3.5mm phone jack)	1 Rear			
CABINET	With Stand	49.2" x 31.1" x 11.7"	42.5" x 27.3" x 10.4"	38.1" x 24.8" x 9.3"	29.1" x 19.6" x 8.1"
	Weight	46.7 lbs	32.0 lbs	23.6 lbs	15.4 lbs
	Without Stand	49.2" x 29.0" x 3.1"	42.5" x 25.3" x 3.2"	38.1" x 22.8" x 3.1"	29.1" x 17.7" x 3.1"
	Weight	42.1 lbs	28.9 lbs	21.2 lbs	14.1 lbs
	Carton	61.0" x 33.1" x 8.3"	52.4" x 29.5" x 6.9"	45.3" x 26.0" x 6.9"	35.5" x 20.9" x 6.4"
	Weight	59.5 lbs	40.6 lbs	31.3 lbs	20.3 lbs
	Swivel	±90°	±90°	±90°	±15°
	Color	Black with Hairline Finish			
	VESA™ Standard Mount Interface	400 x 400mm		200 x 200mm	200 x 100mm
	Credenza Bracket	Yes			No
	Flame Retardant	Yes (Back Cover only)			
REQUIRED LISTINGS	Safety	cUL, UL, NOM, FCC			
	RoHS	Yes			
	Energy Star 6.0	Yes			
UPC		7 19192 91558 9	7 19192 91557 2	7 19192 91556 5	7 19192 91555 8
POWER	Power Source	100~240V 50/60Hz			
	Typical (Watts)	86.2W	72.3W	57.1W	41W
	Stand-by	0.5W			

ENERGY GUIDE

The estimated annual energy cost determined in accordance with 16 CFR Part 305.5 for models 55LN541C, 47LN541C, 42LN541C and 32LN541C are $17, $15, $12 & $8 respectively.

"Your energy cost depends on your utility rates and use. The estimated cost is based on 11 cents per kWh and 5 hours of use per day. For more information, visit www.ftc.gov/energy."[1]

[1]FTC Television labeling rule (18 CFR Part 305, as added by 76 Fed. Reg. 1038 (Jan 6, 2011)).

LG Life's Good
LGsolutions.com

LG Electronics U.S.A., Inc.
HE B2B Division
2000 Millbrook Drive
Lincolnshire, IL 60069

Customer Service: 888.865.3026
www.LGsolutions.com/support

Contact your LG Regional Sales Representative:
Channel: 800.897.8871
Hospitality: 800.228.1236
E-mail: info@LGsolutions.com

SPEC_LN541CSeries_041309_PR

All screen images are simulated. Dimensions and weights are approximate. Design, specifications, and features subject to change without notice.

© Copyright 2013 LG Electronics USA, Inc. All Rights Reserved. "LG Life's Good" is a registered trademark of LG Corp.

ENERGY STAR is a registered trademark of the U.S. Environmental Protection Agency. In Plane Switching is a trademark of LG Display Co., LTD. VESA is a trademark of Video Electronics Standards Association. HDMI, the HDMI logo and High-Definition Multimedia Interface are trademarks or registered trademarks of HDMI Licensing LLC.

All other product and brand names are trademarks or registered trademarks of their respective companies.

Printed in the USA. April 2013